



Play value
The Spiral Bells are intended to strengthen the entire shoulder girdle and the arms. The task is for people to stretch while looking upwards to the spiral situated above head height. Bells are installed at regular intervals in the curved tube. The aim is to touch each one in a circular pattern and make them ring. In performing this exercise people grasp for objects and train the mobility of their joints.

Recommended for
- School children
- Young people
- Adults
- Older people
- Public play areas without supervision, such as playgrounds, parks or similar



Spiral Bells





11.02700

© Richter Spielgeräte GmbH 08/26

Design DiDa Holzwerk

Order No. 11.02700
Spiral Bells

Safety distance
Device dimensions
Functional distance

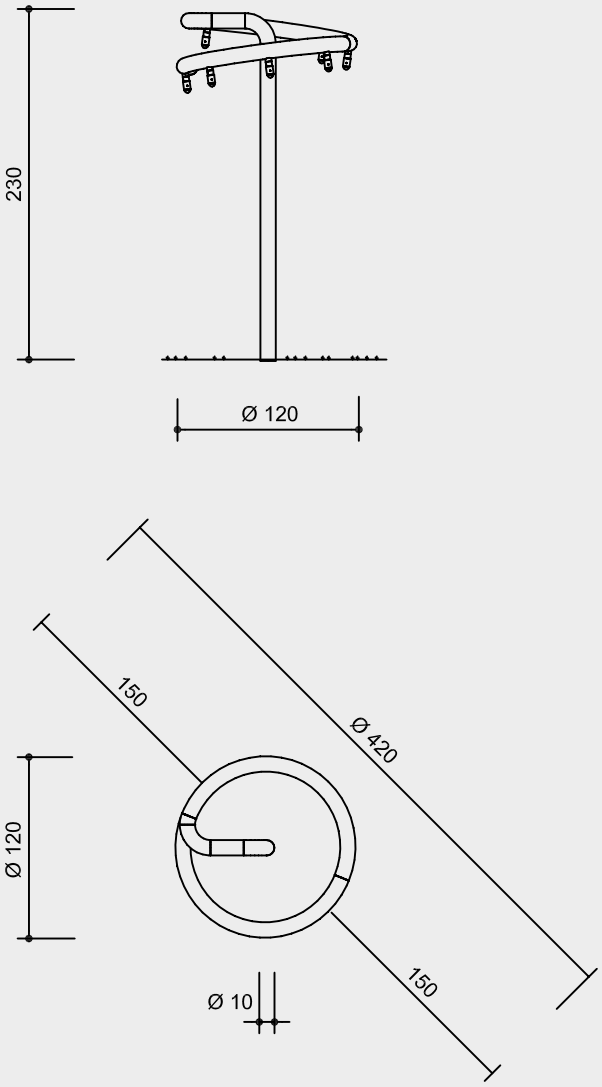

Scale 1:50

Technical information

Equipment made of stainless steel, glass bead blasted

Ground anchor
All parts used for anchoring to the ground are made of hot-dip galvanised steel or stainless steel



For more detailed explanation of the quality characteristics see price list.

Tube diameter 10 cm

Grips made of
polyoxymethylene (POM-C)
Standard colour blue

Dimensions
(small deviations possible)

Height	2.30 m
Diameter	1.20 m
Weight	30 kg

Safety
This equipment is not playground equipment within the scope of DIN EN 1176 and therefore is also not subject to the requirements of this standard. However, it is complied with where appropriate.

Components

1 Spiral Bells

Installation information

Surfacing requirements
no requirements

Foundations
1 item 50 x 50 x 40 cm
Excavation depth 60 cm

Attention:
Exact measurements may vary, for all installation dimensions refer to current installation instructions.
Technical changes reserved.
Equipment that can be bolted into place is also available.



11.02700