Order No. 3.69506
Climbing Trunk
for attachment to Huts 1.00 m

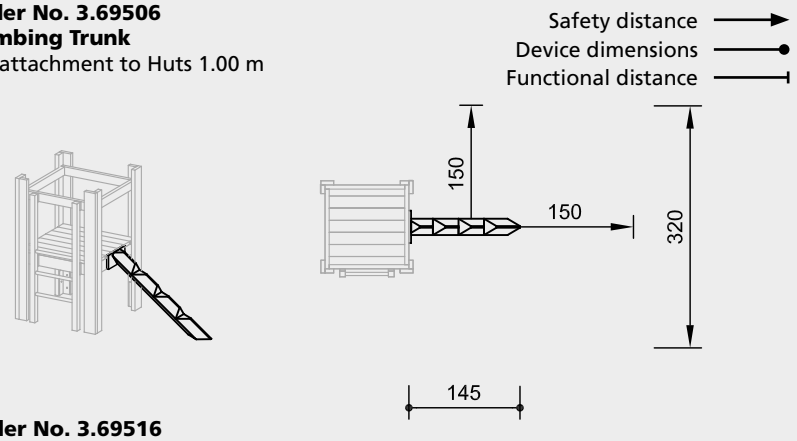

Order No. 3.69516
Climbing Trunk with handrail on one side
for attachment to Huts 1.50 m

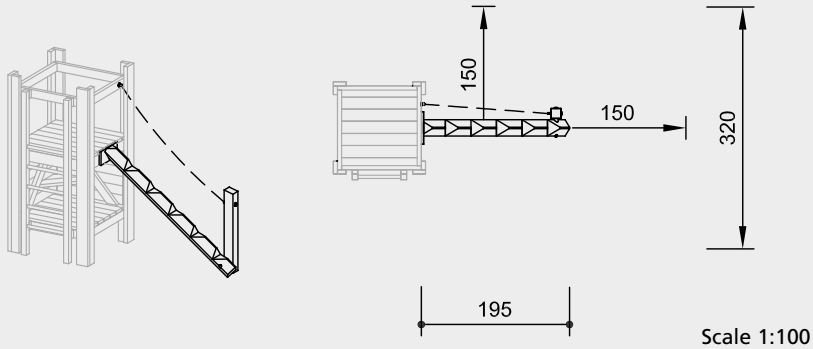

Safety check according to DIN EN 1176

Components

Order No. 3.69506
1 Climbing trunk with steel foot

Order No. 3.69516
1 Climbing trunk with chain handrail and stand post with steel foot

Installation information

Surfacing requirements corresponding to a fall height of
Order No. 3.69506 ≤ 1.00 m
Order No. 3.69516 ≤ 1.50 m
(please refer to price list for more detailed information)

Foundations
Order No. 3.69506
1 item 40 x 40 x 20 cm
Excavation depth 40 cm
Order No. 3.69516
1 item 60 x 60 x 60 cm
Excavation depth 80 cm

Attention:
Exact measurements may vary; for all installation dimensions refer to current assembly instructions.
Technical changes reserved.

Technical information

Equipment made of non-impregnated mountain larch

Core-free
Sawn-timbers core-free, thus decreasing occurrences of cracking and undesired changes in shape



Plywood
Plywood made of mountain larch, thickness ≥ 3 cm. High dimensional stability. Weatherproof glued according to DIN EN 13353:2011



Ground anchor
All parts used for anchoring to the ground are made of hot-dip galvanised steel or stainless steel



Order No. 3.69516: Climbing Trunk with handrail on one side

Bevel cut
Vertical stand posts with bevelled end grain section as constructive wood preservation measure



Profiled washer
Profiled washer for covering protruding screw heads according to standard, improved pressure distribution and protection against water. Impedes loosening the bolt



Chains
Chains made of hot-dip galvanized steel (1.4571 at extra charge) welded before galvanising, short-linked, without eyelets on the connecting parts, easy to exchange and shorten



Distance fitting
Screw connection with distance fitting made of polyamide to avoid entrapment areas



For more detailed explanation of the quality characteristics see price list.

Dimensions
(small deviations possible)

Order No. 3.69506	
Length	2.45 m
Weight	25 kg
Order No. 3.69516	
Length	2.35 m
Weight	50 kg



3.69506

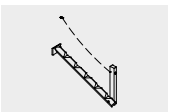

3.69516

© Richter Spielgeräte GmbH 11/26

Order No. 3.19100
Sand Play Equipment
for attachment to Huts 1.50 m

Safety distance
Device dimensions
Functional distance

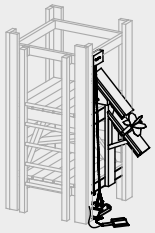

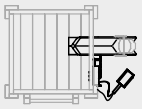

Order No. 3.67503
Climbing Wall
for attachment to Huts 1.50 m

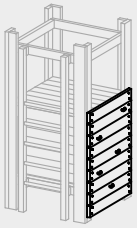

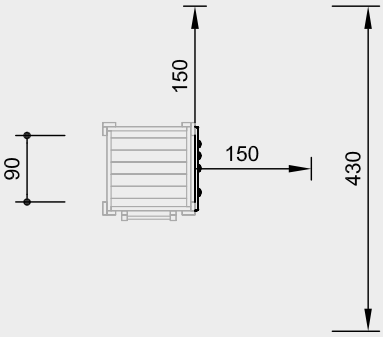

Order No. 3.69430
Climbing Rope
for attachment to Platform Hut 1.50 m
with Roof, pedestal height 1.50 m

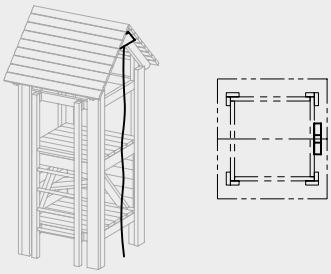

Order No. 3.69433
Climbing Rope
for attachment to Platform Hut 1.00 m
with Roof, pedestal height 1.00 m

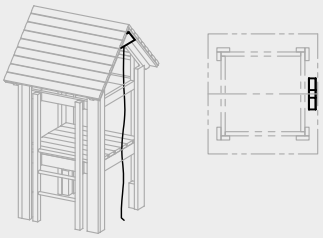

Scale 1:100

Safety check according to DIN EN 1176

Components

Order No. 3.19100
1 Sand hoist with shovel and chain
1 2-level sand chute with sand wheel

Order No. 3.67503
1 Attached climbing wall
5 Climbing grips

Order No. 3.69430 / 3.69433
1 Climbing rope with fitting for roof of platform hut

Attention:
Exact measurements may vary; for all installation dimensions refer to current assembly instructions.
Technical changes reserved.

Installation information

Surfacing requirements
corresponding to a fall height of
Order No. 3.67503 ≤ 1.50 m
Order No. 3.69430 ≤ 2.00 m
Order No. 3.69433 ≤ 1.50 m
(please refer to price list for more detailed information)
Order No. 3.19100
Sand is required for correct functioning.

Foundations
Order No. 3.69430
1 item 30 x 30 x 30 cm
Excavation depth 50 cm


3.19100


3.67503


3.69430 / 3.69433

Technical information

Order No. 3.19100
Equipment made of non-impregnated mountain larch

Core-free
Sawn-timbers core-free, thus decreasing occurrences of cracking and undesired changes in shape



Sintered bush
For all reciprocating movements we use sintered plain bearings which are self-lubricating in use and can easily be exchanged if necessary



Chains
Chains made of hot-dip galvanized steel (1.4571 at extra charge) welded before galvanising, short-linked, without eyelets on the connecting parts, easy to exchange and shorten



Sand container of textile-reinforced rubber belt, 8 mm thick
Sand wheel and shovel hot-dip galvanised

Order No. 3.67503
Equipment made of non-impregnated mountain larch

Core-free
Sawn-timbers core-free, thus decreasing occurrences of cracking and undesired changes in shape



Tongue and groove
Tongue and groove planks made of 4 cm solid wood, highly resilient, no trickling of dust / sand, protection against direct rain



Professional climbing grips made of a mixture of sand-synthetic resin with safe anti-rotation system against unintended twisting of the grips

Order No. 3.69430 / 3.69433

Richter Hercules type rope
Richter Hercules type rope, a combination of galvanised six-strand steel cables and polyester yarn, diameter > 20 mm, laid and glued with very good abrasion resistance, strong sheathing even in the case of damage by puncturing



Rope connection fixed
Fixed rope connection without dangerous openings. Screw connection adjustable and countersunk in the wood



For more detailed explanation of the quality characteristics see price list.

Standard colour rope: rainbow

Dimensions
(small deviations possible)

Order No. 3.67503

Height	1.50 m
Width	0.90 m
Weight	50 kg

Order No. 3.69430 / 3.69433

Installation height	3.00 / 2.50 m
Weight	5 kg