This copy may be copied for maintenance of Richter play equipment.

Instructions for wear checks of play equipment

The equipment must be checked for correct operation and safety, especially the points listed below:

Proof of maintenance

Playground .....

Date of installation .....

Checks depend on the kind of equipment. Any equipment with moving parts must be checked at least twice a year, static equipment at least once a year.

Intervals for maintenance work and checks generally depend on:

- location
- kind of use
- frequency of use
- possible vandalism

For more details see also „General instructions for maintenance of playgrounds“.

Small Accessible Carousel
Order No. 6.32500

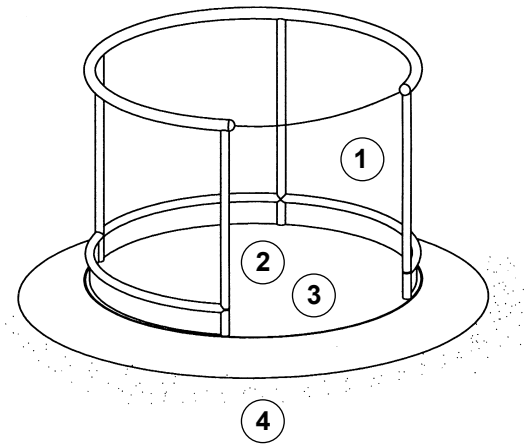

Operation

1. Check the Roundabout for smooth motion ☐
2. Re-lubricate the bearings every 6 - 8 weeks (lubrication nipple is located under the removable company plate) ☐
3. Clean the gaps ☐

Structural stability

4. Check the ground support of the play facility (re-fill hollows in the ground adjacent of the Roundabout or change the location of it) ☐

Special notes (e. g. for repairs):

Repair not carried out, it is still possible to play on equipment	☐
Repair not carried out, equipment ist taken out of action	☐
All work carried out, everything is in order	☐

Maintenance carried out by

..... **Date** .....

COPYRIGHT © RICHTER SPIELGERÄTE GMBH

En-EN 05.10.2026

RICHTER SPIELGERÄTE GMBH · D-83112 FRASDORF · PHONE +49-8052/17980 · FAX 4180